CATALOG

valves

CL18 & CL26 Series

ISO 15407-1, Solenoid Pilot Actuated Valves

numatics®

EMERSON™
Industrial Automation

www.numatics.com

table of contents

numatics®

CL18 & CL26 Series 3-13

Technical and Operating Data 3
How to Order 4
Valve Dimensions 5
Individual Base Dimensions 6-7
Manifold Dimensions 8-9
Regulator Service Kits and Parts 10
Sandwich Pressure Regulator Dimensions 10
Speed Control Kit 11
Blank Station Plate 11
Solenoid Assemblies 11
Service Kits and Parts 12-13

©Numatics 2006
Rev. 1/06

Information subject to change without notice. For ordering information or regarding your local sales office visit www.numatics.com.

CL18 & CL26 Series

single solenoid
2 position, 4-way

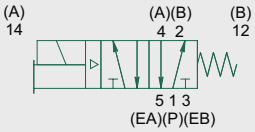

double solenoid
2 position, 4-way

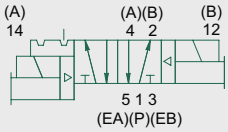

double solenoid
3 position, 4-way
open center

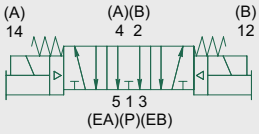

double solenoid
3 position, 4-way
closed center

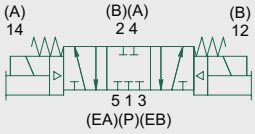

double solenoid pilot
3 Position 4-Way (5/3),
open to 4 (A) and
2 (B) in center

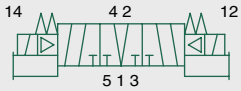

- 5 Ported, 2 and 3 position, 4-way, Spool & Sleeve
- Cv: 0.7-1.0
- Solenoid air pilot actuated
- Housing made from anodized aluminum alloy
- Lubricated or non-lubricated operation
- AC or DC
- Industry standard type 17 mm (9.4 mm) Connector
- Several types of manual overrides
- NEMA 4/IP65
- Conforms to ISO15407-1

Technical Data

VALVE DATA	ENGLISH	METRIC
CL18 Cv	0.7	700 Nl/min
CL26 Cv	1.0	1000 Nl/min
Flow Capacity - CL18	32 SCFM @ 80 PSIG upstream pressure to atmosphere	26 Nl/m @ 6 bar upstream to 5 bar downstream
Flow Capacity - CL26	46 SCFM @ 80 PSIG upstream pressure to atmosphere	37 Nl/m @ 6 bar upstream to 5 bar downstream
Operating Pressure Range	28" Hg. Vacuum to 150 PSIG	Vacuum to 16 bar
Pilot Pressure Range	26.1 to 145 PSIG	1.8 to 10 bar
Temperature Range (Ambient)	-4˚F to +176˚F	-20˚C to +80˚C

Operating Data

ALL SOLENOIDS ARE CONTINUOUS DUTY RATED	24 VDC	115 / 50 Hz.	120 / 60 Hz.
Power (Watts)	1.89	4.15	3.80
Holding Current (Amps)	0.079	0.04	0.038

RESPONSE TIME IN SECONDS	ENERGIZE	DE-ENERGIZE	ENERGIZE	DE-ENERGIZE
CL18 2-Position, Single, Spring Return	0.012	0.028	0.010	0.032
CL18 2-Position, Double, Detented	0.010	0.010	0.010	0.010
CL18 3-Position, Spring Centered	0.010	0.028	0.010	0.032
CL26 2-Position, Single, Spring Return	0.013	0.029	0.011	0.033
CL26 2-Position, Double, Detented	0.011	0.011	0.011	0.011
CL26 3-Position, Spring Centered	0.011	0.029	0.011	0.033

How to Order

Valves

181 BA 4 00 A O 000 61

Valve Series & Port Size
181 = CL18 Series (Valve Unit only)
262 = CL26 Series (Valve Unit only)

Valve Type
BA = Single Solenoid Pilot, (Spring Return) w/Flush Non-Locking Override
BB = Double Solenoid Pilot w/Flush Non-Locking Override

Function
4 = 2 Position, 4-Way
5 = 3 Position, 4-Way Open Center
6 = 3 Position, 4-Way Closed Center
7 = 3 Position 4-Way (5/3), Open to 4 (A) and 2 (B) in Center

Voltage
61 = 24 VDC
30 = 110V, 50-60 Hz

Options
11B = Flush Locking Override
11M = No Override
14A = External Pilot
15Z = Solenoid Rotated 180˚

Port Type
O = Valve Unit only

Wiring Option
A = For Connector type 17 mm (9.4mm)

Mounting
00 = Valve Unit only
01 = 00 w/Speed Control
41 = Standard Base, Side Ports Individual Exhaust
46 = 41 w/Speed Control

Manifolds

AK 0 8 F 0000 2 N STD

Valve Series
8 = CL18 Series
9 = CL26 Series

Number of Valve Stations
B = 2
D = 4
F = 6
H = 8
J = 10
L = 12

Options
STD = Standard

Port Type
N = NPTF
G = G Tap

End Plate Port Size
2 = 1/4 (CL18)
3 = 3/8 (CL26)

Regulators

262 RS 3 00 O O 000 00

Valve Series & Port Size
262 = CL26 Regulator Unit Only

Regulator type
RS = Single Pressure to Port 1 (P)
RD = Dual Pressure to Ports 3 (EB) & 5 (EA)
RC = Dual Pressure w/Non-Relieving Checks
RQ = Dual Pressure w//Relieving Checks
RE = Dual Pressure to Ports 4 (A) & 2 (B)
RT = 2 Pressure Selector

Pressure Range
1 = 10-130 PSIG (0.7-9 Bar)
3 = 3-30 PSIG (0.2-2 Bar)
4 = 5-60 PSIG (0.5 - 4 Bar)

Options
12H = Less Gauge
16N = Jumper on 14 (A) End
16P = Jumper on 12 (B) End
16W = Top Facing gauge

Port Type
O = Regulator Unit only

Wiring Option
O = Regulator Unit only

Mounting
00 = Regulator Unit only
01 = 00 w/Speed Control only
41 = Standard Base, Side Ports Individual Exhaust
46 = 41 w/Speed Control

NOTE: Regulators and speed controls available with CL26 series only.

PLUG CONNECTOR DESCRIPTION	PART NO.
Grey (14 end solenoid) Plug Assembly w/o Light	230-1089
Black (12 end solenoid) Plug Assembly w/o Light	230-1090
Plug Assembly, 24 VDC w/ Light	230-1091
Plug Assembly, 24 VDC w/ Light & Diode	230-1092
Plug Assembly, 120 VAC w/ Light	230-1093
Plug Assembly, 120 VAC w/ Light & MOV	230-1094

Information subject to change without notice. For ordering information or regarding your local sales office visit www.numatics.com.

CL18 Sub-Base Mounted Valve, Connector Type 17mm (9.4mm)

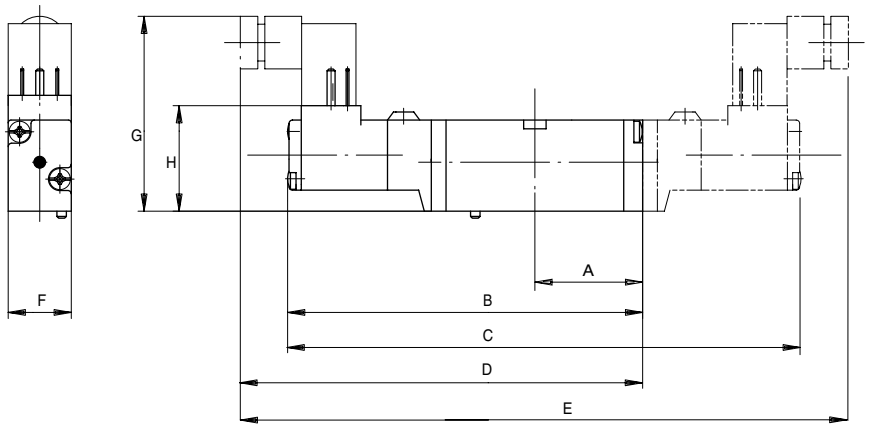

Dimensions

top dimensions = inches
bottom dimensions (in parenthesis) = millimeters

A	B	C	D	E	F	G	H
1.22	3.98	5.55	4.63	6.83	0.71	2.19	1.18
(31.0)	(101.0)	(141.0)	(117.5)	(173.5)	(18.0)	(55.5)	(30.0)

CL26 Sub-Base Mounted Valve, Connector Type 17mm (9.4mm)

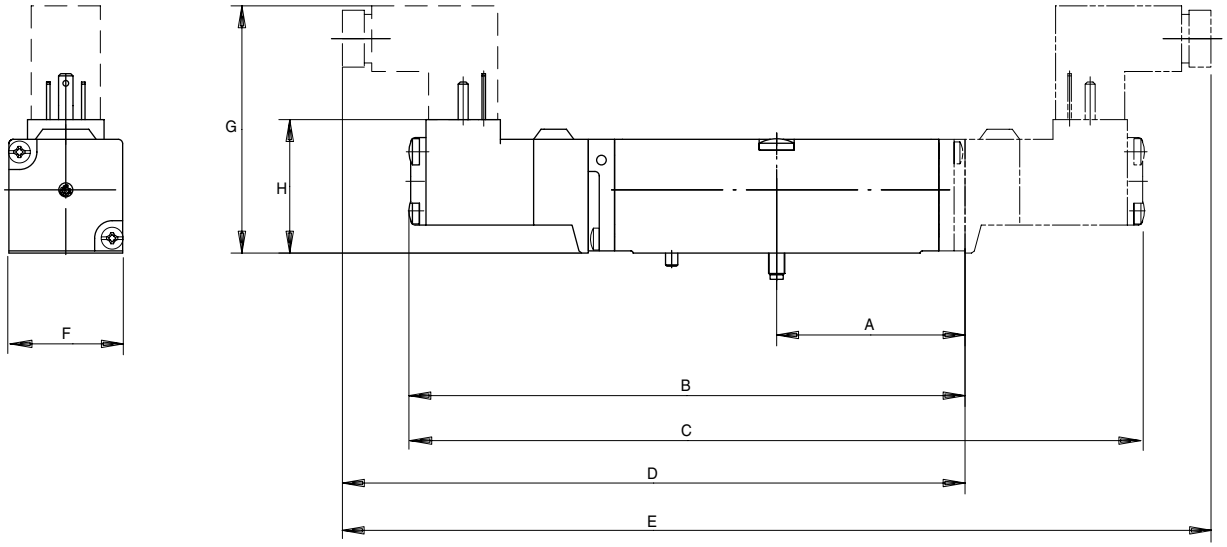

Dimensions

top dimensions = inches
bottom dimensions (in parenthesis) = millimeters

A	B	C	D	E	F	G	H
1.69	5.00	6.62	5.60	7.81	1.02	2.22	1.20
(43.0)	(127.1)	(168.1)	(142.3)	(198.5)	(26.0)	(56.5)	(30.5)

CL18 1/8 NPTF Individual Base 103-568

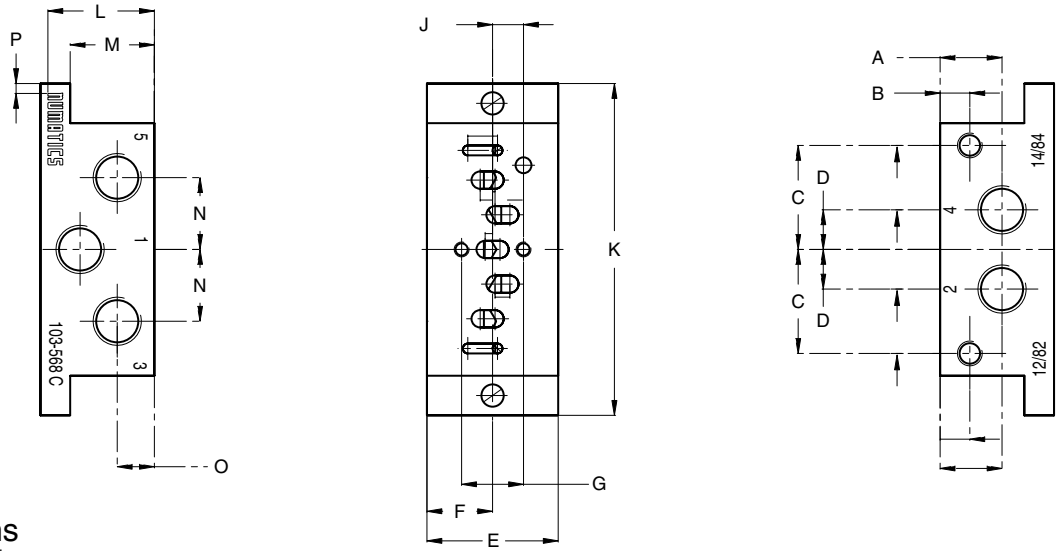

Dimensions

top dimensions = inches
bottom dimensions (in parenthesis) = millimeters

A	B	C	D	E	F	G	J	K	L	M	N	O	P
0.49	0.24	0.83	0.31	1.04	0.52	0.49	0.25	2.64	0.85	0.67	0.57	0.30	0.08
(12.5)	(6.0)	(21.0)	(8.0)	(26.5)	(13.3)	(12.5)	(6.3)	(67.0)	(21.5)	(17.0)	(14.5)	(7.5)	(2.0)

CL26 1/4 NPTF Individual Base 103-576

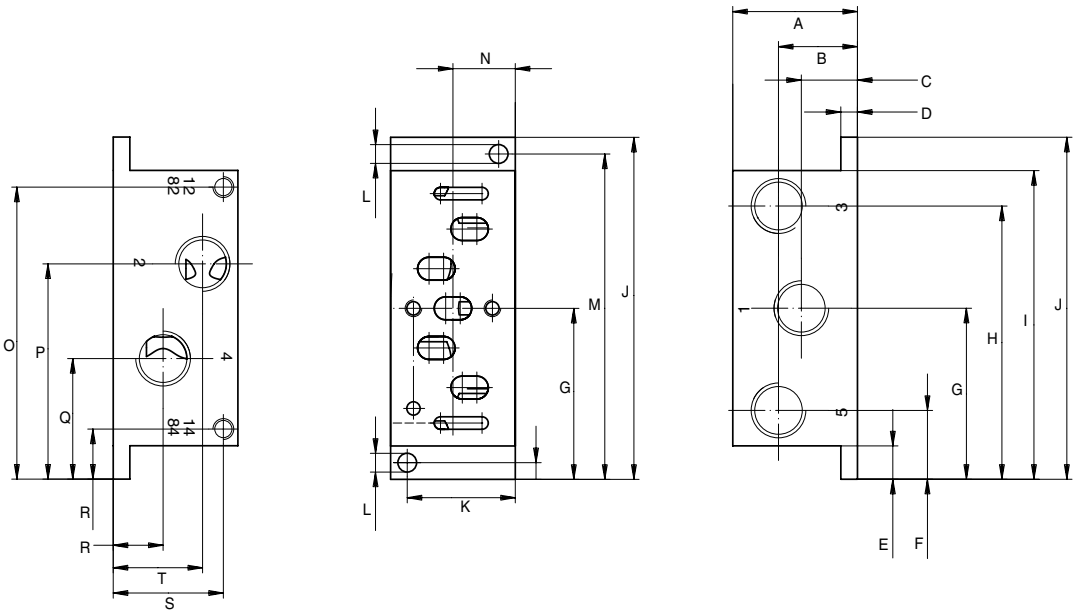

Dimensions

top dimensions = inches
bottom dimensions (in parenthesis) = millimeters

A	B	C	D	E	F	G	H	I	J	K	L	M	N	O	P	Q	R	S	T
1.18	0.75	0.53	0.16	0.31	0.65	1.61	2.58	2.91	3.23	1.02	0.18	3.07	0.20	2.76	2.03	1.14	0.47	1.04	0.85
(30.0)	(19.0)	(13.5)	(4.0)	(8.0)	(16.5)	(41.0)	(65.5)	(74.0)	(82.0)	(26.0)	(4.5)	(78.0)	(5.0)	(70.0)	(51.6)	(28.9)	(12.0)	(26.5)	(21.5)

Information subject to change without notice. For ordering information or regarding your local sales office visit www.numatics.com.

CL18 1/8 G-Tap Base 103-562

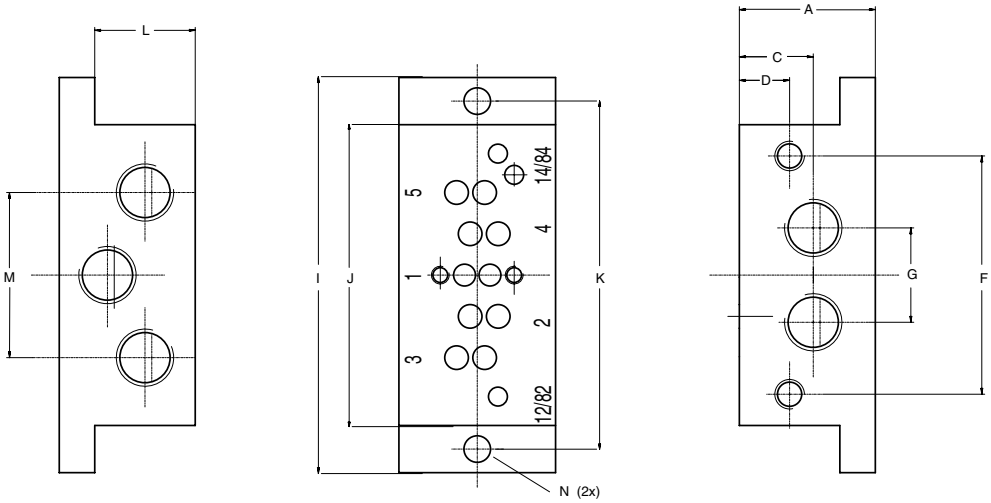

Dimensions

top dimensions = inches
bottom dimensions (in parenthesis) = millimeters

A	C	D	F	G	H	I	J	K	L	M	N
0.90 (23.0)	0.49 (12.5)	0.33 (8.5)	1.59 (40.4)	0.63 (16.0)	1.04 (26.5)	2.64 (67.0)	2.01 (51.0)	2.32 (59.0)	0.67 (17.0)	1.10 (28.0)	0.18 (4.5)

CL26 1/4 G-Tap Base 103-563

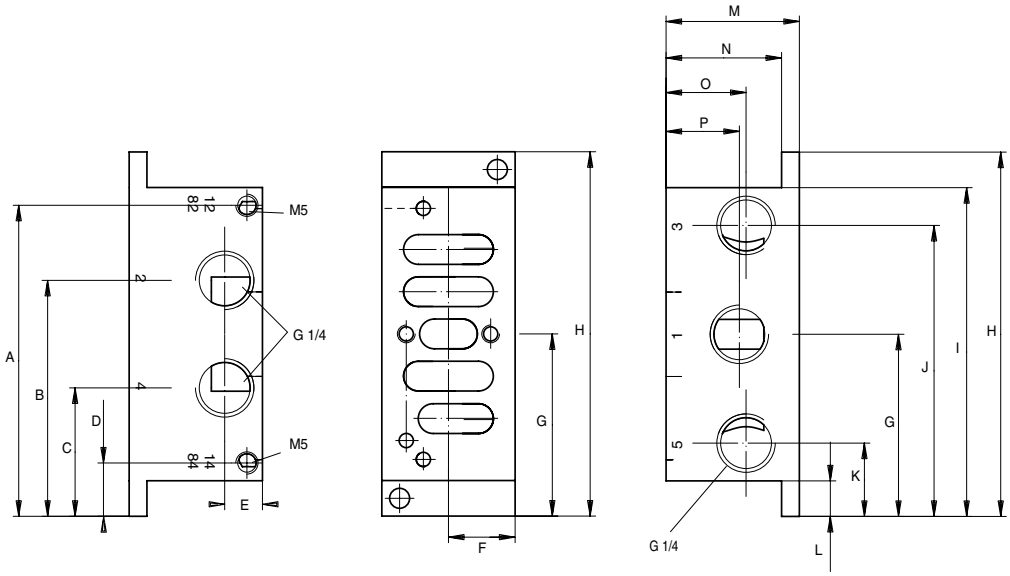

Dimensions

top dimensions = inches
bottom dimensions (in parenthesis) = millimeters

A	B	C	D	E	F	G	H	I	J	K	L	M	N	O	P
2.76 (70.0)	2.09 (53.1)	1.14 (28.9)	0.47 (12.0)	0.33 (8.5)	0.59 (15.0)	1.61 (41.0)	3.23 (82.0)	2.91 (74.0)	2.58 (65.5)	0.65 (16.5)	0.31 (8.0)	1.18 (30.0)	1.02 (26.0)	0.71 (18.0)	0.65 (16.5)

CL18 Manifold with 1/8 NPTF Side Ports

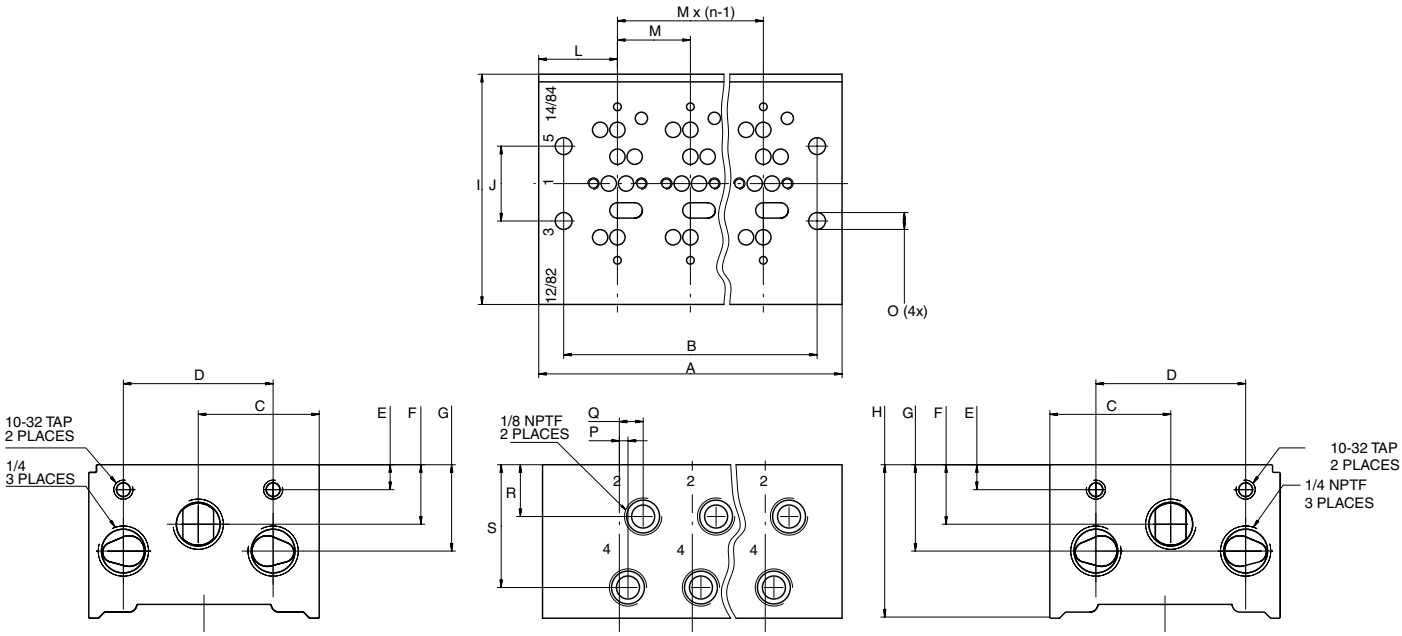

Dimensions

top dimensions = inches
bottom dimensions (in parenthesis) = millimeters

STATIONS	PART NO. 1/4 NPTF	PART NO. G 1/4	A	B	C	D	WEIGHT APPROX. (lbs)
2	106-1186	106-740	2.36 (60.0)	1.85 (47.0)	1.24 (31.5)	1.54 (39.0)	0.701
4	106-1188	106-742	3.86 (98.0)	3.35 (85.0)	1.24 (31.5)	1.54 (39.0)	1.168
6	106-1190	106-744	5.35 (136.0)	4.84 (123.0)	1.24 (31.5)	1.54 (39.0)	1.596
8	106-1192	106-746	6.85 (174.0)	6.34 (161.0)	1.24 (31.5)	1.54 (39.0)	2.103
10	106-1194	106-748	8.35 (212.0)	7.83 (199.0)	1.24 (31.5)	1.54 (39.0)	2.571
12	106-1195	106-749	9.84 (250.0)	9.33 (237.0)	1.24 (31.5)	1.54 (39.0)	3.038

E	F	G	H	I	J	L	M	O	P	Q	R	S
0.26	0.61	0.93	1.57	2.36	0.77	0.81	0.75	0.17	0.09	0.24	0.53	1.26
(6.5)	(15.5)	(23.5)	(40.0)	(60.0)	(19.5)	(20.5)	(19.0)	(4.4)	(2.3)	(6.2)	(13.5)	(32.0)

Information subject to change without notice. For ordering information or regarding your local sales office visit www.numatics.com.

CL26 Manifold with 1/4 NPTF Side Ports

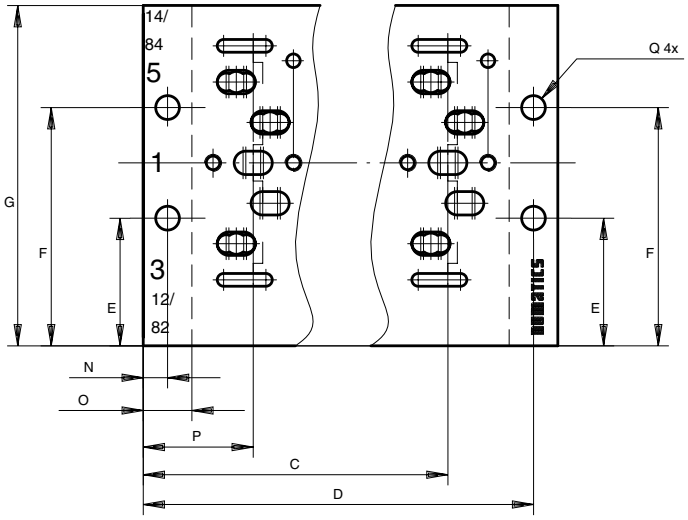

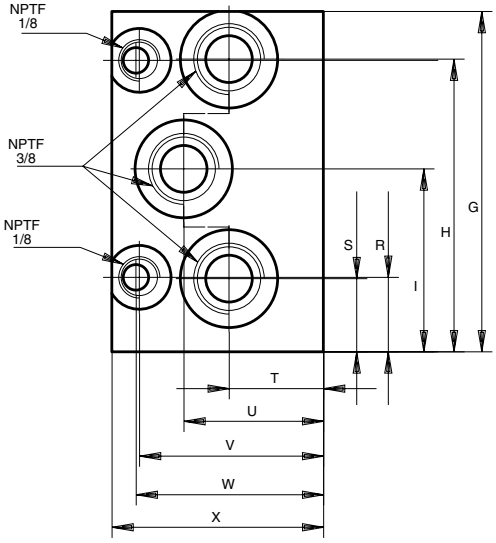

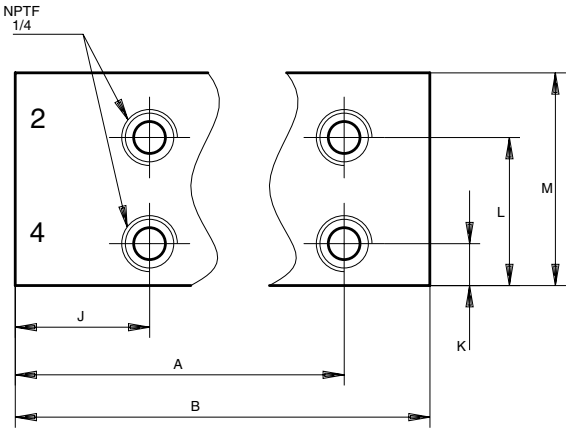

Dimensions

top dimensions = inches
bottom dimensions (in parenthesis) = millimeters

STATIONS	PART NO. 1/4 NPTF	PART NO. G 1/4	A	B	C	D	E	F	G	H	WEIGHT APPROX. (lbs)
2	106-1313	106-1135	2.31 (58.8)	3.11 (79.0)	2.09 (53.0)	2.89 (73.3)	1.18 (30.0)	2.20 (56.0)	3.15 (80.0)	2.71 (68.8)	1.986
4	106-1315	106-1137	4.44 (112.8)	5.24 (133.0)	4.21 (107.0)	5.01 (127.3)	1.18 (30.0)	2.20 (56.0)	3.15 (80.0)	2.71 (68.8)	3.342
6	106-1317	106-1139	6.57 (166.8)	7.36 (187.0)	6.34 (161.0)	7.14 (181.3)	1.18 (30.0)	2.20 (56.0)	3.15 (80.0)	2.71 (68.8)	4.700
8	106-1319	106-1141	8.69 (220.8)	9.49 (241.0)	8.46 (215.0)	9.26 (235.3)	1.18 (30.0)	2.20 (56.0)	3.15 (80.0)	2.71 (68.8)	6.056
10	106-1321	106-1143	10.82 (274.8)	11.61 (295.0)	10.59 (269.0)	11.39 (289.3)	1.18 (30.0)	2.20 (56.0)	3.15 (80.0)	2.71 (68.8)	7.414
12	106-1323	106-1145	12.94 (328.8)	13.74 (349.0)	12.72 (323.0)	13.52 (343.3)	1.18 (30.0)	2.20 (56.0)	3.15 (80.0)	2.71 (68.8)	8.772

I	J	K	L	M	N	O	P	Q	R	S	T	U	V	W	X
1.69	1.25	0.39	1.37	1.97	0.23	0.45	1.02	0.22	0.69	0.68	0.88	1.30	1.71	1.74	1.97
(43.0)	(31.8)	(9.9)	(34.8)	(50.0)	(5.8)	(11.5)	(26.0)	(5.6)	(17.5)	(17.2)	(22.3)	(33.0)	(43.5)	(44.3)	(50.0)

Regulator Kits & Service Parts

Regulator Service Kit 239-1393

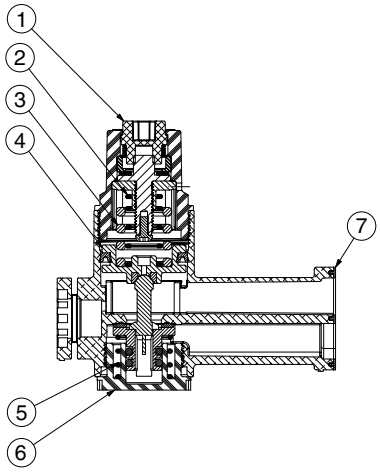

Regulator Unit Kits
(includes regulator assembly, gaskets, screws)

PSIG	PART NO.
3-30 PSIG	239-1386
5-60 PSIG	239-1387
10-130 PSIG	239-1388

DET. NO.	NO. REQ'D	PART NAME
1	1	Bonnet
2	1	Spring
3	1	Spring
4	1	Piston Assembly
5	1	Spring
6	1	Cap
7	1	Gasket

Sandwich Pressure Regulator

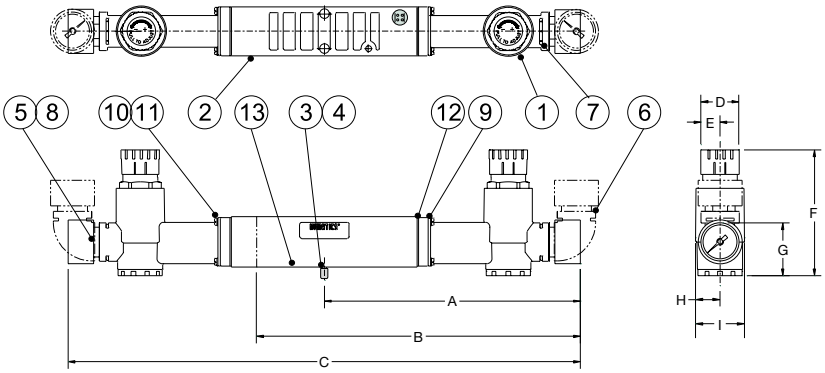

Dimensions

top dimensions = inches
bottom dimensions (in parenthesis) = millimeters

A	B	C	D	E	F	G
5.48 (139.2)	6.94 (176.3)	10.97 (278.6)	0.81 (20.6)	0.41 (10.4)	2.7 (68.6)	1.14 (29.0)

H	I
0.52 (13.2)	1.04 (26.4)

Note: Regulators and speed controls available with CL26 series only.

Parts List

DET. NO.	NO. REQ'D	PART NAME	PART NO.
1	2*	Regulator	see above
2	1	Single riser block	125-798
2	1	Double riser block	125-799
3	2	O-Ring	126-528
4	2	Stud	125-812
5	2*	Gauge 160 PSI max.	214-212
5	2*	Gauge 11 bar max.	214-213
5	2*	Gauge 60 PSI max.	214-217
5	2*	Gauge 4 bar max.	214-218
6	2*	Elbow	134-505
7	4**	Pin	131-236
8	4**	O-Ring	126-105
9	2*	Clamp	138-181
10	8***	Screw	127-377
11	8***	Lockwasher	128-172
12	2*	Gasket	113-535
13	1	Gasket	113-534

* (1) Required for RS
** (2) Required for RS
*** (4) Required for RS

Information subject to change without notice. For ordering information or regarding your local sales office visit www.numatics.com.

Speed Control Kit 239-2099

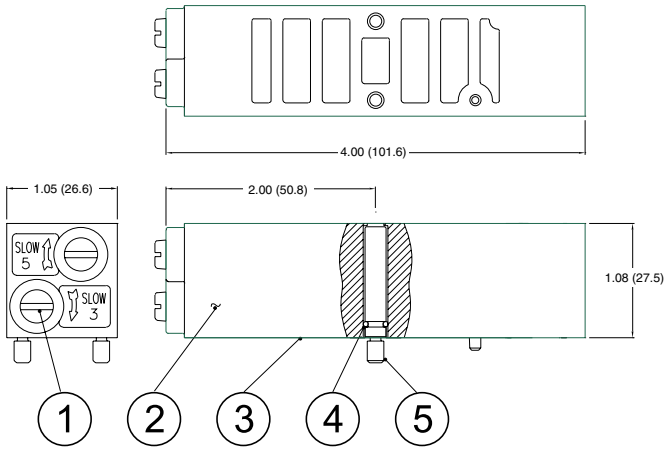

Parts List

DET. NO.	NO. REQ'D	PART NAME	PART NO.
1	2	Metering Screw	118-178
Not Shown	2	Nylon Rod	125-131
2	1	Speed Control Body	119-632
3	1	Gasket	113-534
4	2	O-Ring	126-528
5	2	Stud	125-812

Note: Regulators and speed controls available with CL26 series only.

Blank Station Plate CL18 239-478 CL26 239-501

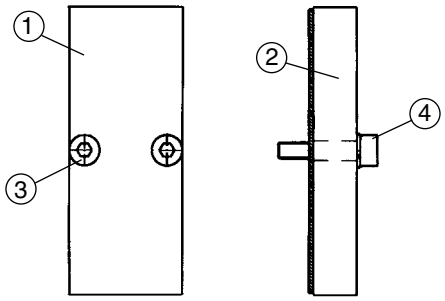

Parts List

DET. NO.	NO. REQ'D	PART NAME	CL18 PART NO.	CL26 PART NO.
1	1	Blank Station Plate	119-315	119-323
2	1	Gasket	113-513	113-358
3	2	Screw	127-513	127-400
4	2	Lockwasher	128-192	128-188

Solenoid Assemblies- CL18 & CL26

	AC 110V/50-60 Hz	DC 24 VDC
Solenoid w/Flush Non-Locking Manual Override	228-778	225-356
Solenoid w/o Manual Override	228-788	225-473
Solenoid w/Flush Locking Manual Override	228-781	225-362

Internal/External Pilot Selection

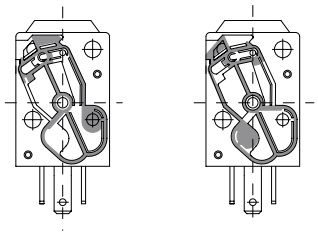

CL18 Service Kits and Parts

Kit No. CL18-K1 (For Model 181BA4)

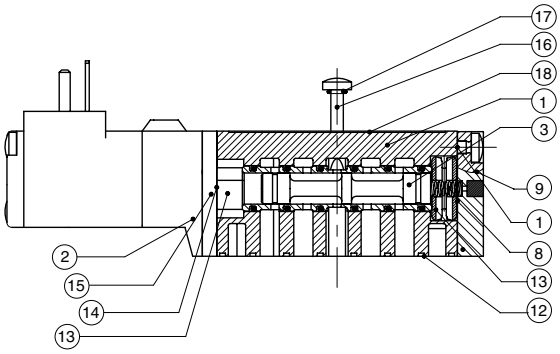

Kit No. CL18-K2 (For Model 181BB4)

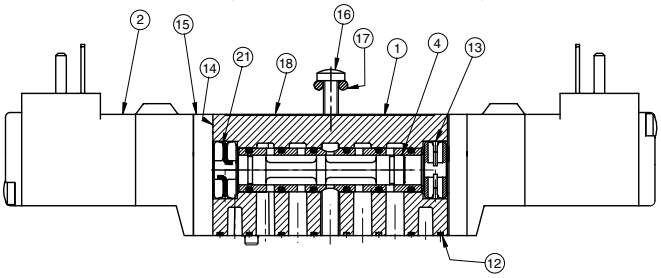

Kit No. CL18-K3 (For Models 181BB5)

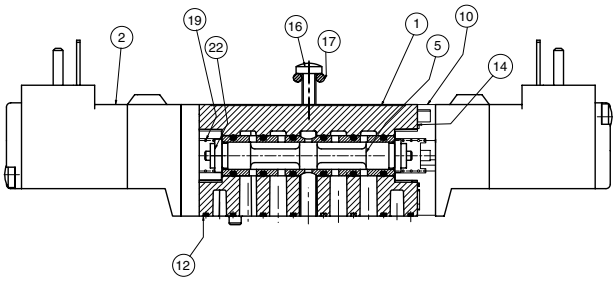

Kit No. CL18-K3 (For Models 181BB6)

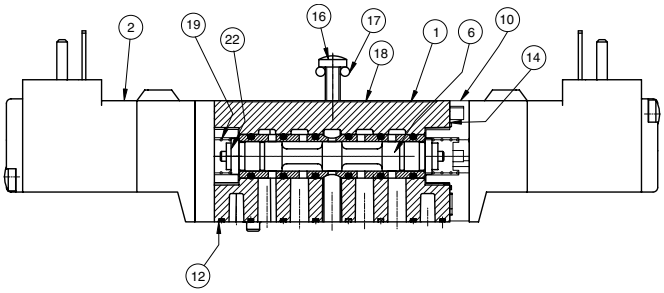

Kit No. CL18-K3 (For Models 181BB7)

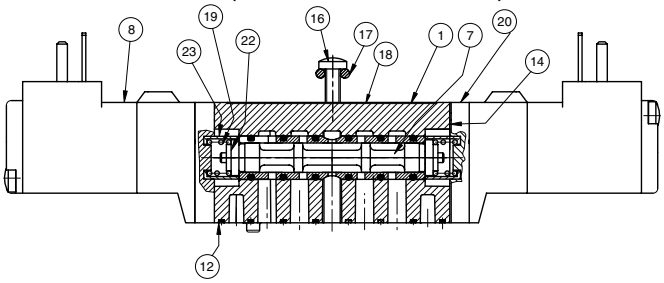

Parts List

DET NO.	NO REQ'D BA4	BB4	BB5	BB6	BB7	PART NAME	PART NO.
1	1	1	1	1	1	Valve Body (not sold separately)	
2	1	2	2	2	2	Solenoid Assembly	*See p. 11*
3	1	N/A	N/A	N/A	N/A	Spool/Sleeve Assembly	209-512
4	N/A	1	N/A	N/A	N/A	Spool/Sleeve Assembly	209-513
5	N/A	N/A	1	N/A	N/A	Spool/Sleeve Assembly	209-514
6	N/A	N/A	N/A	1	N/A	Spool/Sleeve Assembly	209-515
7	N/A	N/A	N/A	N/A	1	Spool/Sleeve Assembly	209-516
8	1*	N/A	N/A	N/A	N/A	Return Spring	115-263
9	1	N/A	N/A	N/A	N/A	Spring Cap Assembly	204-424
10	N/A	N/A	2	2	N/A	Adaptor Plate	119-570
11	2	N/A	N/A	N/A	N/A	Screw	127-657
12	1*	1*	1*	1*	1*	Gasket body/manifold	113-346
13	2*	1*	N/A	N/A	N/A	Detent Body	110-117
14	1*	2*	2*	2*	2*	Gasket adaptor/body	113-347
15	1	2	N/A	N/A	N/A	Adaptor Plate	119-309
16	2	2	2	2	2	Mounting Screw	127-821
17	2*	2*	2*	2*	2*	O-Ring	126-412
18	1	1	1	1	1	Nameplate	122-803
19	N/A	N/A	2*	2*	2*	Spring 1.8 bar (std) or 1.0 bar	115-266 115-376
20	N/A	N/A	N/A	N/A	2	Adaptor Plate	119-558
21	N/A	1*	N/A	N/A	N/A	Detent Assembly	210-122
22	N/A	N/A	2	2	2	Spring Retainer	116-386
23	N/A	N/A	N/A	N/A	2	Bushing	116-385

*Indicates parts included in kits.

Information subject to change without notice. For ordering information or regarding your local sales office visit www.numatics.com.

CL26 Service Kits and Parts

Kit No. CL26-K1 (For Models 262BA4)

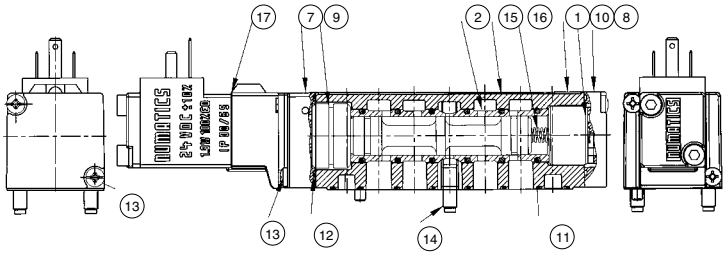

Kit No. CL26-K2 (For Models 262BB4)

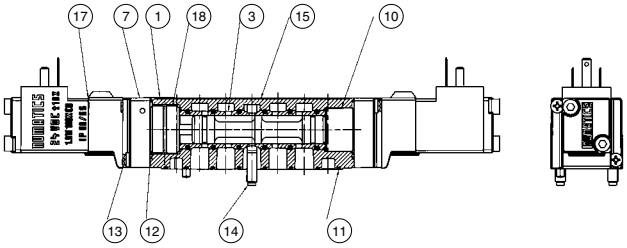

Kit No. CL26-K3 (For Models 262BB5)

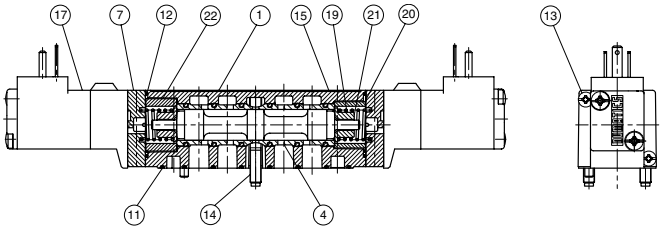

Kit No. CL26-K3 (For Models 262BB6)

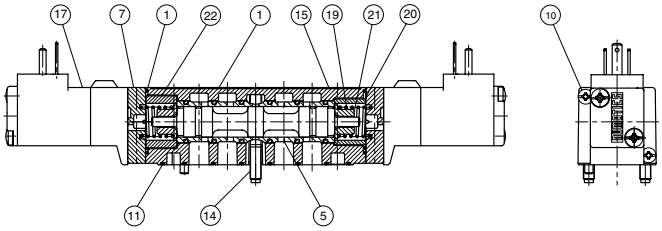

Kit No. CL26-K3 (For Models 262BB7)

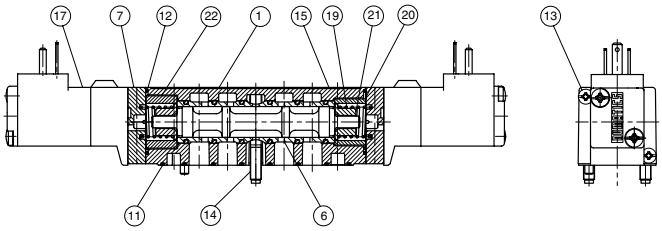

Parts List

DET NO.	NO REQ'D BA4	BB4	BB5	BB6	BB7	PART NAME	PART NO.
1	1	1	1	1	1	Valve Body (not sold separately)	
2	1	N/A	N/A	N/A	N/A	Spool/Sleeve Assembly	209-517
3	N/A	1	N/A	N/A	N/A	Spool/Sleeve Assembly	209-518
4	N/A	N/A	1	N/A	N/A	Spool/Sleeve Assembly	209-519
5	N/A	N/A	N/A	1	N/A	Spool/Sleeve Assembly	209-520
6	N/A	N/A	N/A	N/A	1	Spool/Sleeve Assembly	209-521
7	1	2	2	2	2	Adaptor Assembly	219-270
8	1	N/A	N/A	N/A	N/A	Spring Cap Assembly	204-425
9	1*	N/A	N/A	N/A	N/A	Detent Body	110-114
10	1*	1*	N/A	N/A	N/A	Bumper	116-306
11	1*	1*	1*	1*	1*	Gasket body/manifold	113-357
12	1*	2*	2*	2*	2*	Gasket adaptor/body	113-356
13	4	4	4	4	4	Screw	127-919
14	2	2	2	2	2	Mounting Screw Ass'y**	213-459
15	1	1	1	1	1	Nameplate	122-999
16	1*	N/A	N/A	N/A	N/A	Spring Return	115-271
17	1	2	2	2	2	Solenoid Assembly	*See pg. 11*
18	N/A	1*	N/A	N/A	2	Detent Assembly	210-118
19	N/A	N/A	2*	2*	2*	Spring	115-277
20	N/A	N/A	1	1	1	Bushing	117-170
21	N/A	N/A	2	2	2	Spring Retainer	116-464
22	1	N/A	1	1	1	Bushing	117-171

*Indicates parts included in kits.
**Mounting screw assembly includes Mounting Screw 127-745 and O-Ring 126-163.

numatics

World Class Supplier of Pneumatic Components

World Headquarters
Numatics Incorporated
Phone: 248-887-4111
Fax: 248-887-9190

UNITED STATES

Numatics – Air Preparation
Phone: 810-667-3900
Fax: 810-667-3902

Numatics – Valves
Phone: 248-887-4111
Fax: 248-887-9190

Numatics – Miniature Valves
Phone: 248-960-1400
Fax: 248-960-2160

Numatics – Cylinders
Phone: 615-771-1200
Fax: 615-771-1201

Numatics – Rodless Cylinders
Phone: 519-452-1777
Fax: 519-452-3995

Numatics – Automation
Phone: 440-934-3200
Fax: 440-934-2288

CANADA

Ontario
Numatics, Ltd.
Phone: 519-452-1777
Fax: 519-452-3995

Quebec
Numatics, Ltd.
Phone: 514-332-6444
Fax: 514-332-9273

British Columbia
Numatics, Ltd.
Phone: 604-574-0401
Fax: 604-574-3713

EUROPE

Germany – European Headquarters
Numatics GmbH
Phone: 011-49-22 41-31 60-0
Fax: 011-49-22 41-31 60 40

Hungary
Numatics Kft.
Phone: 011-36-13 82 21 35
Fax: 011-36-12 04 39 47

EUROPE

England
Numatics Limited
Phone: 011-44-1525-37 07 35
Fax: 011-44-1525-38 25 67

France
Numatics s.a.r.l.
Phone: 011-33-1 41 21 48 88
Fax: 011-33-1 41 21 48 89

Italy
Numatics srl
Phone: 011-39-030-373 19 99
Fax: 011-39-030-373 19 81

Netherlands
Numatics B.V.
Phone: 011-31-418-65 29 50
Fax: 011-31-418-65 29 43

Spain
Numatics Spain S.L.
Phone: 011-34-93-221 21 96
Fax: 011-34-93-221 35 14

AFRICA

South Africa
Numatics SA (Pty) Ltd.
Phone: 011-27-11-8 65 44 52
Fax: 011-27-11-8 65 42 90

LATIN & SOUTH AMERICA

Mexico
Numatics de Mexico S.A. de C.V.
Phone: 011-52-222-284 6176
Fax: 011-52-222-284 6179

Brazil
Valvair Comercial Ltda.
Phone: 011-55-12-351 2874
Fax: 011-55-12-351 1958

ASIA & PACIFIC

Australia
Numatics Australia Pty. Ltd.
Phone: 011-61-3-95 63 86 00
Fax: 011-61-3-95 63 85 11

Taiwan – Asian Headquarters
Numatics Co, Ltd. Asia
Phone: 011-886-2-29 15 16 05
Fax: 011-886-2-29 14 18 97

For a comprehensive listing of all Numatics production and distribution facilities worldwide, visit www.numatics.com

PDF-CL18CL26SERIES-0306