CATALOG

slides

Ultra Series

Slide Table

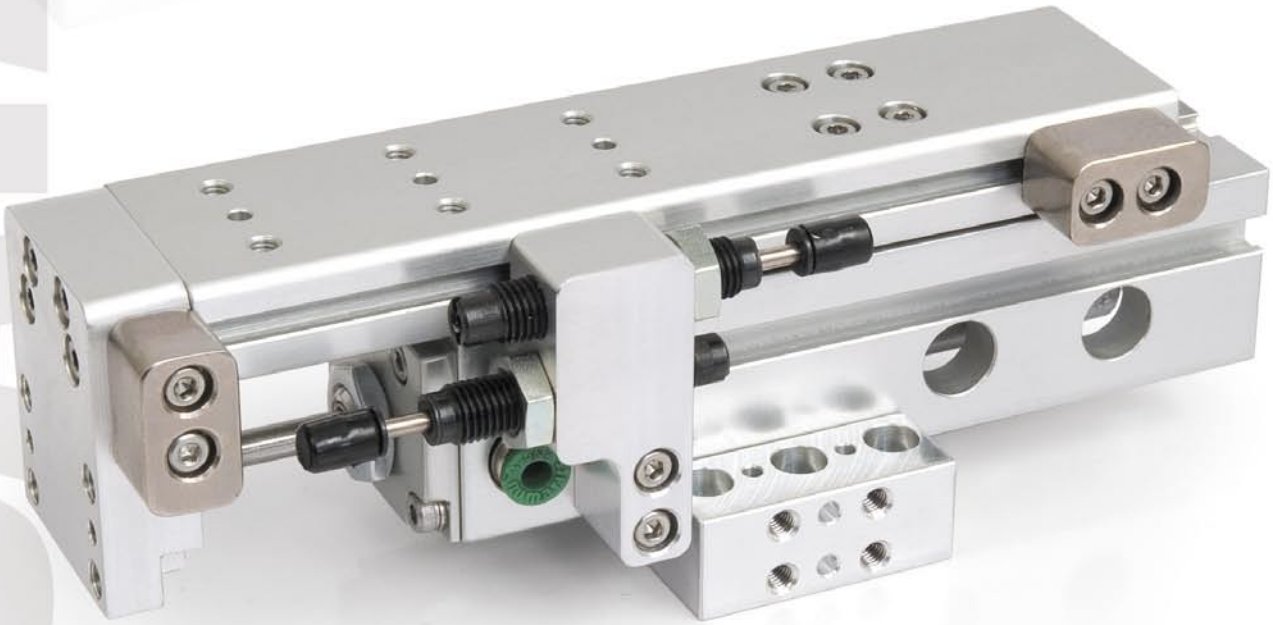

numatics®

www.numatics.com

Motion Control

We constantly pursue opportunities to offer our customers the highest quality and the most innovative motion control products in the industry. We provide a wide range of motion control products for a variety of industries and many different high-tech applications. Our products range from a comprehensive line of rodless cylinders and electrical actuators, to a complete NFPA cylinder line and virtually everything in between.

We know that our customers have a choice. That is why we design our motion control products to be easy to buy and easy to apply. We take great pride in offering flexibility to our customers. We understand that sometimes a standard product will not satisfy every application requirement. We are able to deviate from the standard product to offer a modified version that meets our customers' specific needs. We work from the philosophy that today's special is tomorrow's standard.

A comprehensive product offering, technical assistance, a multitude of support tools, and a global presence makes Numatics the easy choice when using motion control products.

Warranty

The following warranty is in lieu of all warranties, expressed, implied or statutory, including but not limited to, any implied warranty of merchantability, application or fitness for a particular purpose and any other warranty obligation on the part of Numatics Motion Control. Numatics Motion Control warrants that its products are free from defects in materials and workmanship for a period of one (1) year from date of shipment by Numatics Motion Control to the original purchaser. Warranty does not apply to normal replacement of wear items such as seals and bearings components, etc. This warranty shall be voided as to and not apply to any products which have been subject to misuse, misapplication, negligence, accident, modification or tampering, nor (without limiting the foregoing) shall it apply to Numatics Motion Control products components used other than in Numatics Motion Control products for which the same were designed. The obligation to Numatics Motion Control under this warranty is limited to repair, replacement or correction of any defective Numatics Motion Control part or product determined by our inspection to be a valid warranty claim. Numatics Motion Control reserves the right to examine the goods at the Buyer's site, or issue shipping instructions for return to Numatics Motion Control,transportation charges prepaid by Buyer. Numatics Motion Control reserves the right to make changes in designs and specifications without notice. All technical data and dimensions have been checked, however we cannot assume responsibility for possible errors and omissions.

table of contents

numatics

Ultra Series 1-9

How to Order 2
Technincal Specifications 3
5/16 & 8mm Bore 4
9/16 & 12mm Bore 5
3/4 & 20mm Bore 6
1-1/16 & 25mm Bore 7
Base Plate 8
Electronic Switches 9

Ultra Slides

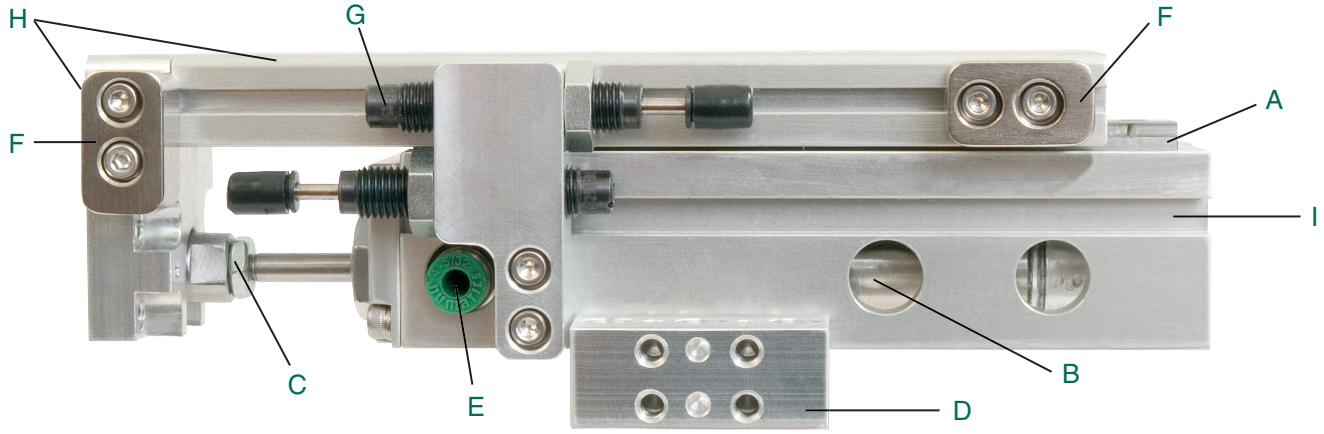

A. Square rail:
Square rail provides high load carrying capabilities.

B. Cylinder:
Cylinder is standard Numatics M-Series or ISO VDMA 6432

C. Alignment Coupler:
Alignment Coupler isolates piston rod from side loading

D. Optional Base mount:
Optional Base mount with thru holes and tapped holes for side mounting

E. Fittings:
Fittings installed with a variety of tube options.

F. Electroless Nickel plated hard stops:
Electroless Nickel plated hard stops can be mounted on either side.

G. Optional stroke adjustment or shock absorbers:
Available with optional stroke adjustment or shock absorbers. Can be mounted on either side.

H. Flexible mounting:
Flexible mounting for tooling. NuMate™ tooling plate allows for direct mount of same size Ultra slide. Dowel holes are standard.

I. Sensing track:
Sensing track located on both sides of the Ultra Series will accept standard “T-Slot” Hall effect sensors.

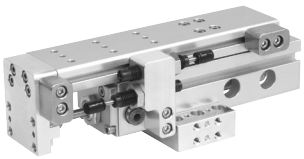

How to Order

USI 03 005 1 Z B A 1 A

Cylinder Option
USI = Imperial
USM = Metric ISO VDMA 6432

Bore Diameter (USI)
*01 = 5/16”
02 = 9/16”
03 = 3/4”
04 = 1 -1/16
Metric Bore Diameters (USM)
*08 = 8 mm
12 = 12 mm
20 = 20 mm
25 = 25 mm
*5/16 & 8mm bore not available with shocks or sensing

Stroke (USI)
0X5 = 1/2”
001 = 1”
0X9 = 1-1/2”
002 = 2”
003 = 3”
004 = 4”
*005 = 5”
*006 = 6”
Metric Strokes (USM)
025 = 25 mm
050 = 50 mm
080 = 80 mm
100 = 100 mm
*125 = 125 mm
*160 = 160 mm
*5/16 & 8mm bore not available In these stroke lengths

Seal Option
1 = Buna
2 = Viton

Sensing Type
1 = Hall PNP (Sourcing)
2 = Hall NPN (Sinking)
6 = No Sensing
Quick Disconnect Cord Set
Y = Hall NPN (Sinking)
Z = Hall PNP (Sourcing)

Sensing Position
Right Side
A = Single Pos. Extend
B = Single Pos. Retract
C = Extend & Retract
D = No Sensing
Left Side
X = Extend & Retract
Y = Single Pos. Retract
Z = Single Pos. Extend

*** Fittings Right Side**
A = 1/8" Tube
B = 5/32" Tube
C = 1/4" Tube
E = 4mm Tube
F = 6mm Tube
* Fittings Left Side
H = 1/8" Tube
J = 5/32" Tube
K = 1/4" Tube
L = 4mm Tube
M = 6mm Tube
* 8mm bore not available with 1/4” or 6mm tube option.
5/16 bore only available with 1/8” and 5/32” tube option.
9/16 bore not available with 4mm or 6mm tube option.

*All USI imperial cylinders come with end porting.

*USM metric ISO VDMA 6432 cylinders extend porting can be on right or left side.

***Base Plate Option**
Right Side
1 = One base plate
2 = Two base plate
D = No base plate
Left Side
4 = One base plate
5 = Two base plate
*See page 8 for maximum Base plates per stroke

*** Hardware Option**
Right side
** 1 = Stroke adjust extend stroke Shock absorber on retract stroke
** 2 = Stroke adjust retract stroke Shock absorber on extend stroke
4 = No Hardware
Right side Shock Absorber
A = Extend
B = Retract
C = Extend & Retract
Stroke Adjustment Right Side
5 = Extend
6 = Retract
7 = Extend & Retract
Left Side Hardware Option
D = Stroke adjust extend Shock absorber on retract stroke
E = Stroke adjust retract Shock absorber for extend stroke
Left side Shock Absorber
G = Extend
H = Retract
J = Extend & Retract
Stroke Adjustment Left Side
K = Extend
L = Retract
M = Extend & Retract
*When calling out shocks for extend or retract, the shock becomes the stroke adjustment. Therefore, you do not have to order both stroke adjustment and shocks.
** When ordering shock absorber and stroke adjust, Stroke adjustment screw will be mounted on opposite side of shock. (Fig. 1)

Figure 1
Left Side

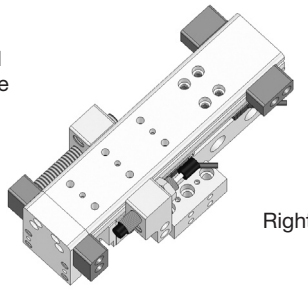

Right Side

Order example: USI020021ZC21C

Part Description: USI with 9/16” bore, 2” stroke, buna seals, PNP quick disconnect sensors 2 position on right side with stroke adjust for retract stroke on left side and shock absorber on right side for extend stroke. Base plate mounting holes on right side and fittings for 1/4” tube.

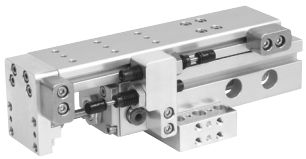

Technical Specifications

Unit Output force (USI)

Bore	5/16"	9/16"	3/4"	1-1/16"
Extend (lbs.)	.077	.299	.442	.887
Retract (lbs.)	.065	.221	.393	.810

Multiply Force Factor x PSI = Pound force

Unit Output force (USM)

Bore	8mm	12mm	20mm	25mm
Extend (N)	3.83	9.00	28.66	44.00
Retract (N)	2.50	6.16	23.66	36.33

Multiply Force Factor x Bar = Newton force

Position A

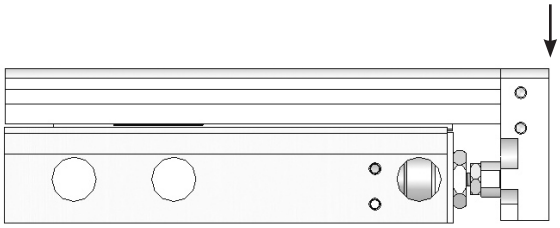

Position B

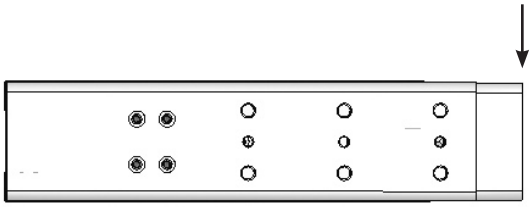

Position "A" Kg (lbs.)	Bore			
Stroke	8mm (5/16)	12mm (9/16)	20mm (3/4)	25mm (1-1/16)
25 - 50mm (1/2" - 2")	0.4 (0.9)	0.6 (1.3)	1.8 (3.9)	2.3 (5.0)
80 - 100mm (3" - 4")	0.6 (1.3)	1.0 (2.4)	1.5 (3.3)	1.8 (4.0)
125 - 160mm (5" - 6")	N/A	0.9 (2.0)	1.0 (2.1)	1.3 (2.8)

Position "B" Kg (lbs.)	Bore			
Stroke	8mm (5/16)	12mm (9/16)	20mm (3/4)	25mm (1-1/16)
25 - 50mm (1/2" - 2")	0.5 (1.1)	0.7 (1.6)	2.1 (4.8)	2.7 (6.0)
80 - 100mm (3" - 4")	0.7 (1.5)	1.0 (2.3)	1.6 (3.5)	2.0 (4.6)
125 - 160mm (5" - 6")	N/A	1.2 (1.6)	1.0 (2.3)	1.5 (3.4)

F1/F2 Kg (lbs.) Load over bearing	Bore			
Stroke	8mm (5/16)	12mm (9/16)	20mm (3/4)	25mm (1-1/16)
25 - 50mm (1/2" - 2")	1.6 (3.6)	1.9 (4.3)	5.8 (12.8)	7.0 (15.5)
80 - 100mm (3" - 4")	1.9 (4.3)	2.9 (6.4)	7.5 (16.6)	9.1 (20.1)
125 - 160mm (5" - 6")	N/A	2.9 (6.4)	7.5 (16.6)	9.1 (20.1)

Bore sizes 5/16, 9/16, 8mm & 12mm with strokes 1⁄2" to 50 mm have one bearing block.

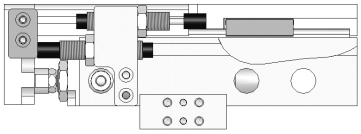

Bore sizes 5/16, 9/16, 8mm & 12mm with strokes over 2" & 50 mm have 2 bearing blocks.

All other bores and strokes are standard with 2 bearing blocks for all strokes.

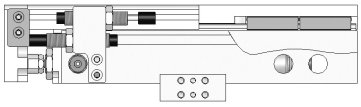

Bore	8mm (5/16)	8mm (5/16)	12mm (9/16)	12mm (9/16)
Stroke	25mm - 50mm (1/2" - 2")	80mm - 100mm (3" - 4")	25mm -50mm (1/2" - 2")	80mm - 160mm (3" - 6")
M2 Nm (in. lbs.)	2.0 (18.2)	4.1 (36.3)	3.1 (27.4)	4.8 (42.4)
M3 Nm (in. lbs.)	2.6 (23.0)	5.2 (46.0)	3.8 (33.6)	5.9 (52.2)
M4 Nm (in. lbs.)	2.45 (21.7)	4.9 (43.4)	3.6 (31.8)	5.2 (46.0)

Bore	20mm (3/4")	20mm (3/4")	25mm (1-1/16")	25mm (1-1/16")
Stroke	25mm - 50mm (1/2" - 2")	80mm - 160mm (3" - 6")	25mm -50mm (1/2" - 2")	80mm - 160mm (3" - 6")
M2 Nm (in. lbs.)	4.8 (42.4)	3.7 (32.7)	8.8 (77.9)	7.0 (61.9)
M3 Nm (in. lbs.)	5.9 (52.2)	4.6 (40.7)	14.5 (128.3)	11.7 (103.5)
M4 Nm (in. lbs.)	5.2 (46.0)	4.1 (36.2)	10.8 (95.6)	8.6 (76.1)

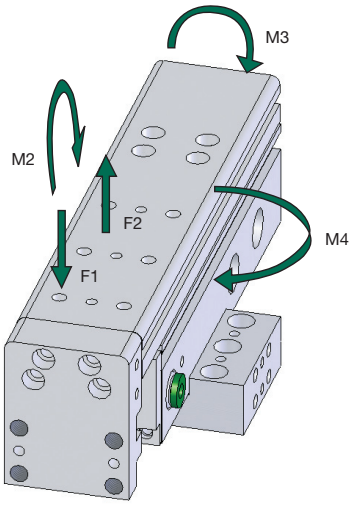

5/16 & 8mm Bore

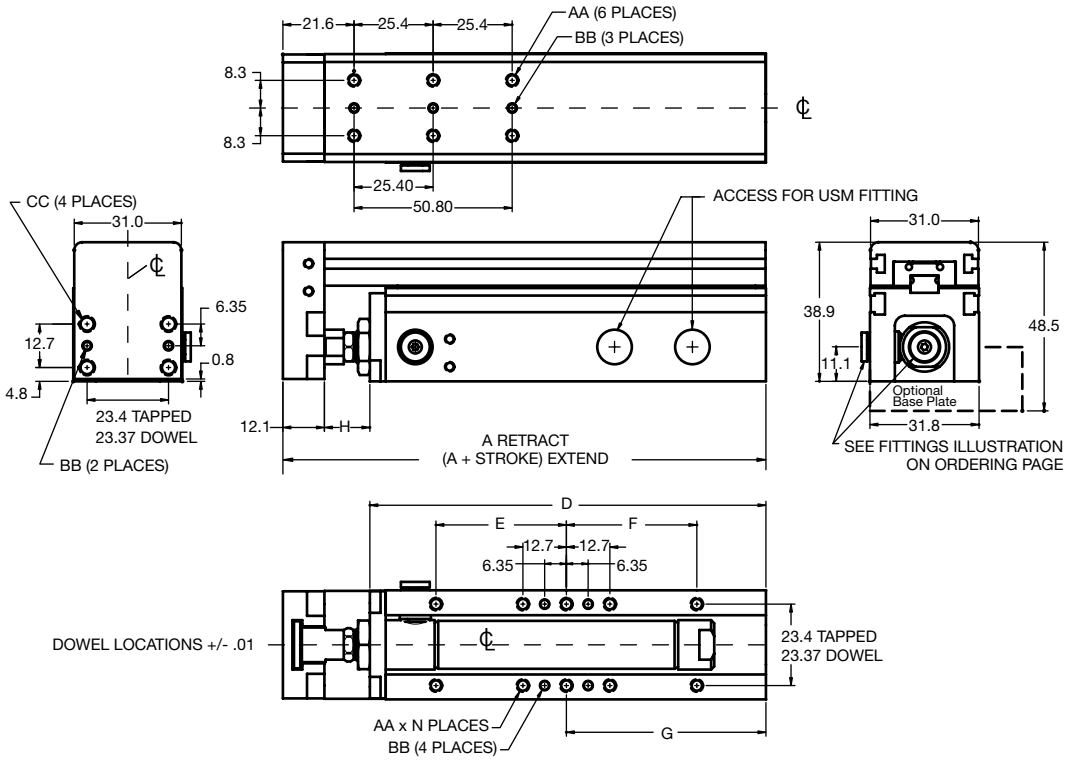

	Stroke (in)			
mm (in)	25 mm-50 mm	1/2”-2”	80 mm-100 mm	3”-4”
A	145.7 (5.74)	136.4 (5.37)	195.8 (7.71)	186.4 (7.34”)
D	112.5 (4.43)	112.5 (4.43)	162.6 (6.40)	162.6 (6.40)
E	N/A	N/A	38.1 (1.50)	38.1 (1.50)
F	38.1 (1.50)	38.1 (1.50)	38.1 (1.50)	38.1 (1.50)
G	66.6 (2.62)	66.6 (2.62)	84.9 (3.34)	84.9 (3.34)
H	21.1 (0.83)	11.7 (0.46)	21.1 (0.83)	11.7 (0.46)
N	8	8	10	10
AA	M4 x 0.7	M4 x 0.7	M4 x 0.7	M4 x 0.7
BB	3 mm (S.F.)	3 mm (S.F.)	3 mm (S.F.)	3 mm (S.F.)
CC	Tapped M5 x 0.8 C’Bored for M4 SHCS	Tapped M5 x 0.8 C’Bored for M4 SHCS	Tapped M5 x 0.8 C’Bored for M4 SHCS	Tapped M5 x 0.8 C’Bored for M4 SHCS

Stroke Adjustment Dimensions

(can mount on either side)

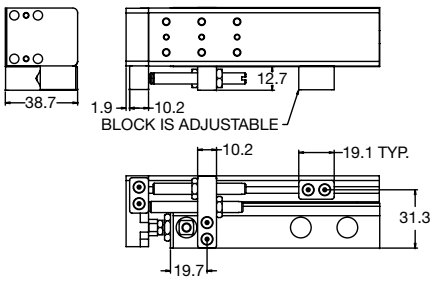

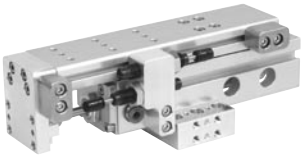

9/16 & 12mm Bore

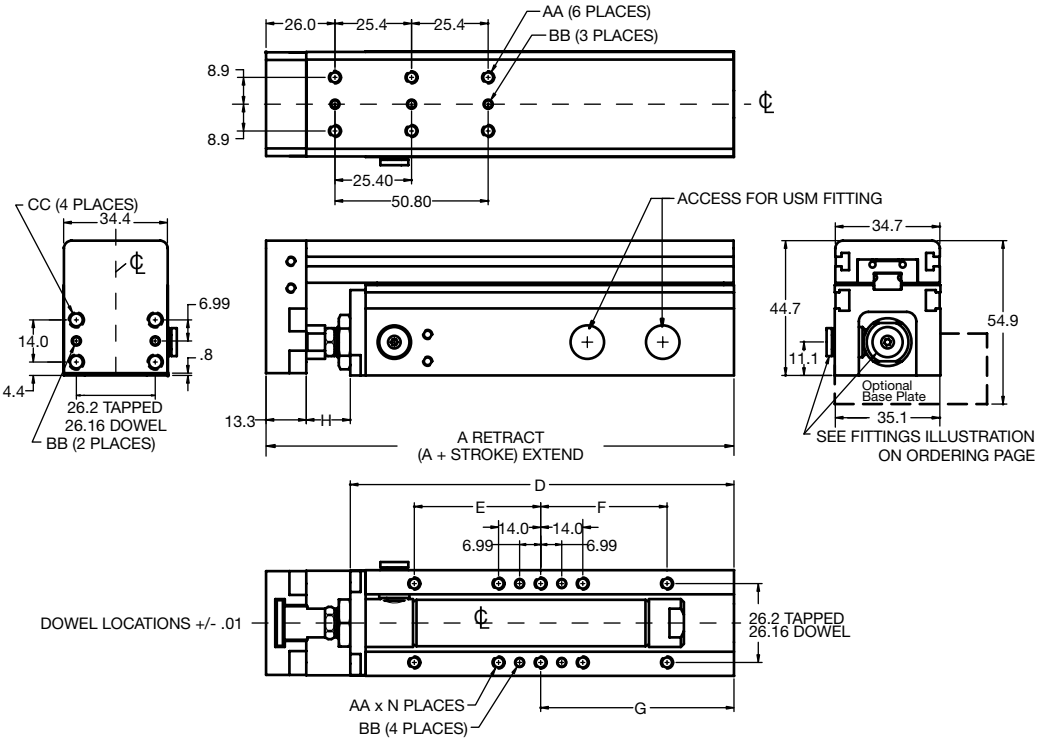

	Stroke (in)					
mm (in)	25 mm-50 mm	1/2”-2”	80 mm-100 mm	3”-4”	125 mm-160 mm	5”-6”
A	163.9 (6.45)	155.2 (6.11)	213.1 (8.39)	204.3 (8.04)	274.2 (10.79)	265.4 (10.45)
D	127.2 (5.00)	127.2 (5.00)	176.4 (6.94)	176.4 (6.94)	237.4 (9.35)	237.4 (9.35)
E	N/A	N/A	41.9 (1.65)	41.9 (1.65)	41.9 (1.65)	41.9 (1.65)
F	41.9 (1.65)	41.9 (1.65)	41.9 (1.65)	41.9 (1.65)	41.9 (1.65)	41.9 (1.65)
G	76.4 (3.00)	76.4 (3.00)	95.1 (3.74)	95.1 (3.74)	116.2 (4.57)	116.2 (4.57)
H	23.4 (0.92)	14.6 (0.57)	23.4 (0.92)	14.6 (0.57)	23.4 (0.92)	14.6 (0.57)
N	8	8	10	10	10	10
AA	M4 x 0.7	M4 x 0.7	M4 x 0.7	M4 x 0.7	M4 x 0.7	M4 x 0.7
BB	3 mm (S.F.)	3 mm (S.F.)	3 mm (S.F.)	3 mm (S.F.)	3 mm (S.F.)	3 mm (S.F.)
CC	Tapped M5 x 0.8 C’Bored for M4 SHCS	Tapped M5 x 0.8 C’Bored for M4 SHCS	Tapped M5 x 0.8 C’Bored for M4 SHCS	Tapped M5 x 0.8 C’Bored for M4 SHCS	Tapped M5 x 0.8 C’Bored for M4 SHCS	Tapped M5 x 0.8 C’Bored for M4 SHCS

Stroke Adjustment Dimensions
(can mount on either side)

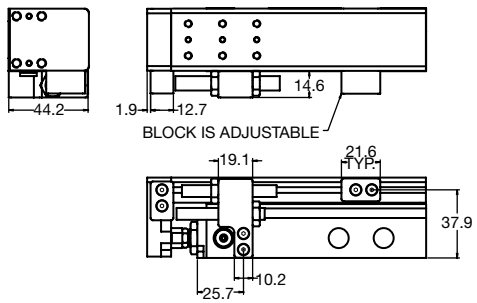

Shock Option Dimensions
(can mount on either side)

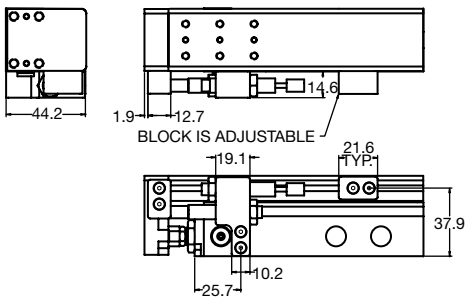

3/4 & 20 mm Bore

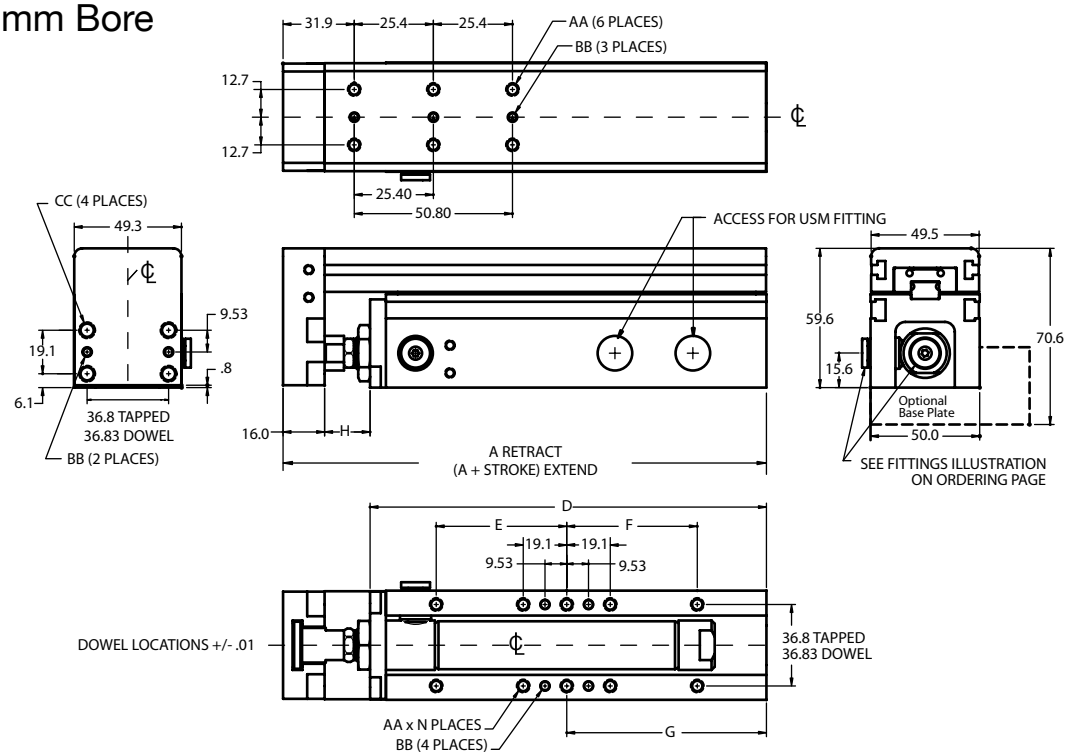

	Stroke (in)					
mm (in)	25 mm-50 mm	1/2”-2”	80 mm-100 mm	3”-4”	125 mm-160 mm	5”-6”
A	190.8 (7.51)	180.8 (7.12)	240.8 (9.48)	230.8 (9.09)	300.9 (11.84)	290.9 (11.46)
D	149.4 (5.88)	145.0 (5.71)	199.5 (7.85)	195.1 (7.68)	259.5 (10.22)	255.1 (10.04)
E	N/A	N/A	57.1 (2.25)	57.1 (2.25)	57.1 (2.25)	57.1 (2.25)
F	N/A	N/A	57.1 (2.25)	57.1 (2.25)	57.1 (2.25)	57.1 (2.25)
G	83.4 (3.28)	83.4 (3.28)	95.6 (3.76)	95.6 (3.76)	134.4 (5.29)	134.4 (5.29)
H	25.3 (0.99)	19.8 (0.77)	25.3 (0.99)	19.8 (0.77)	25.3 (0.99)	19.8 (0.77)
N	6	6	10	10	10	10
AA	M5 x 0.8	M5 x 0.8	M5 x 0.8	M5 x 0.8	M5 x 0.8	M5 x 0.8
BB	4 mm (S.F.)	4 mm (S.F.)	4 mm (S.F.)	4 mm (S.F.)	4 mm (S.F.)	4 mm (S.F.)
CC	Tapped M6 x 1.0 C’Bored for M5 SHCS	Tapped M6 x 1.0 C’Bored for M5 SHCS	Tapped M6 x 1.0 C’Bored for M5 SHCS	Tapped M6 x 1.0 C’Bored for M5 SHCS	Tapped M6 x 1.0 C’Bored for M5 SHCS	Tapped M6 x 1.0 C’Bored for M5 SHCS

Stroke Adjustment Dimensions

(can mount on either side)

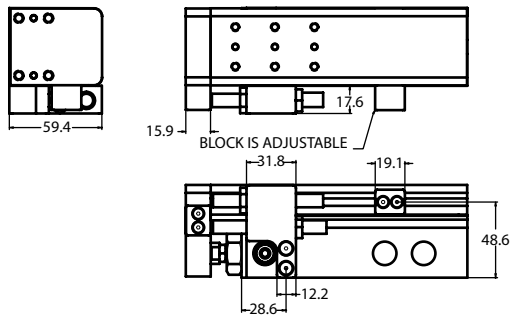

Shock Option Dimensions

(can mount on either side)

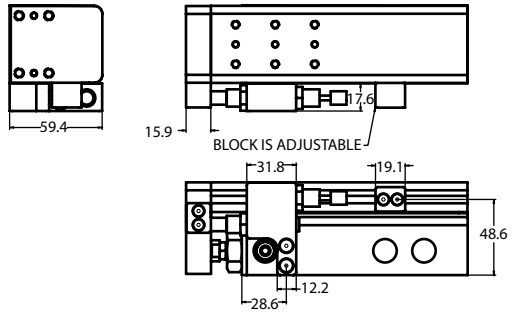

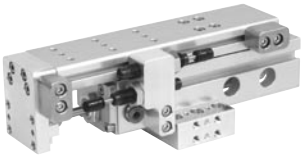

1-1/16 & 25 mm Bore

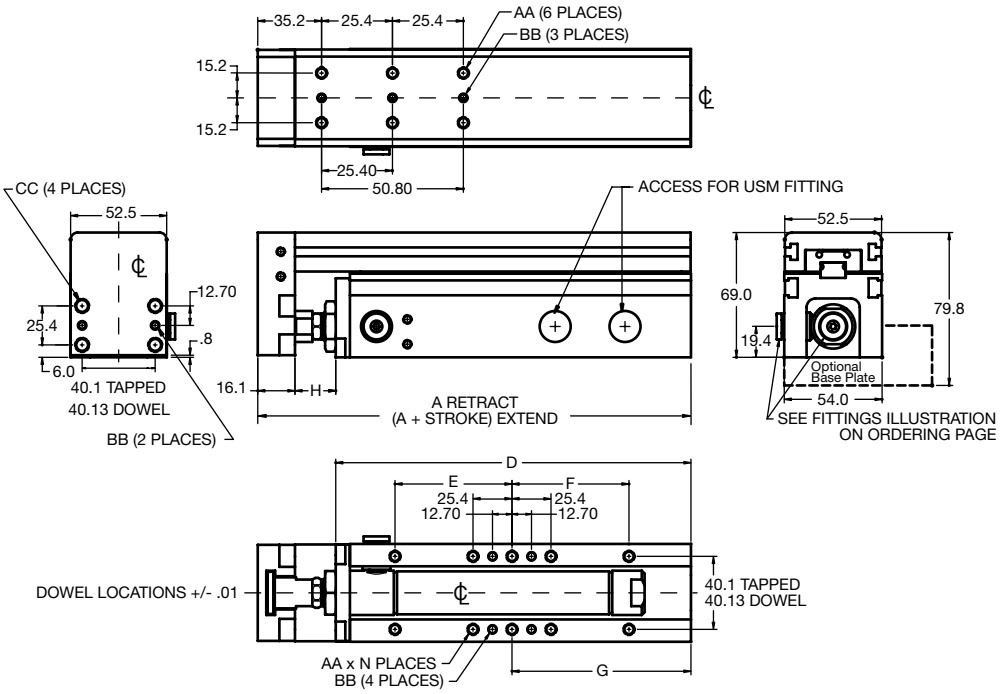

	Stroke (in)					
mm (in)	25 mm-50 mm	1/2”-2”	80 mm-100 mm	3”-4”	125 mm-160 mm	5”-6”
A	201.8 (7.94)	192.0 (7.56)	251.3 (9.89)	241.6 (9.51)	327.0 (12.87)	312.2 (12.29)
D	153.7 (6.05)	153.7 (6.05)	203.0 (8.00)	203.2 (8.00)	273.8 (10.78)	273.8 (10.78)
E	N/A	N/A	50.8 (2.00)	50.8 (2.00)	50.8 (2.00)	50.8 (2.00)
F	N/A	N/A	50.8 (2.00)	50.8 (2.00)	50.8 (2.00)	50.8 (2.00)
G	69.2 (2.72)	69.2 (2.72)	90.8 (3.57)	90.8 (3.57)	140.5 (5.53)	140.5 (5.53)
H	32.0 (1.26)	22.2 (0.87)	32.0 (1.26)	22.2 (0.87)	32.0 (1.26)	22.2 (0.87)
N	6	6	10	10	10	10
AA	M5 x 0.8	M5 x 0.8	M5 x 0.8	M5 x 0.8	M5 x 0.8	M5 x 0.8
BB	4 mm (S.F.)	4 mm (S.F.)	4 mm (S.F.)	4 mm (S.F.)	4 mm (S.F.)	4 mm (S.F.)
CC	Tapped M6 x 1.0 C’Bored for M5 SHCS	Tapped M6 x 1.0 C’Bored for M5 SHCS	Tapped M6 x 1.0 C’Bored for M5 SHCS	Tapped M6 x 1.0 C’Bored for M5 SHCS	Tapped M6 x 1.0 C’Bored for M5 x 0.8	Tapped M6 x 1.0 C’Bored for M5 SHCS

Stroke Adjustment Dimensions

(can mount on either side)

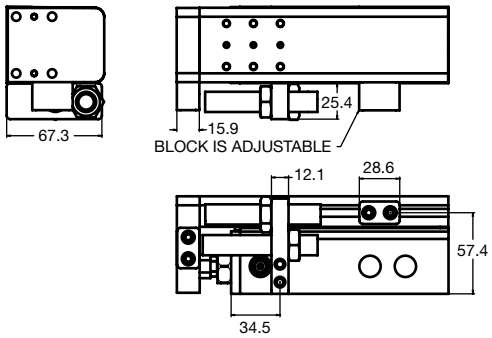

Shock Option Dimensions

(can mount on either side)

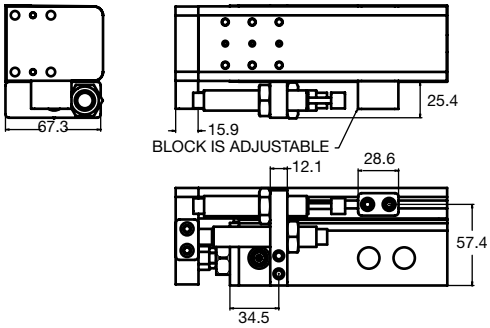

Base Plate

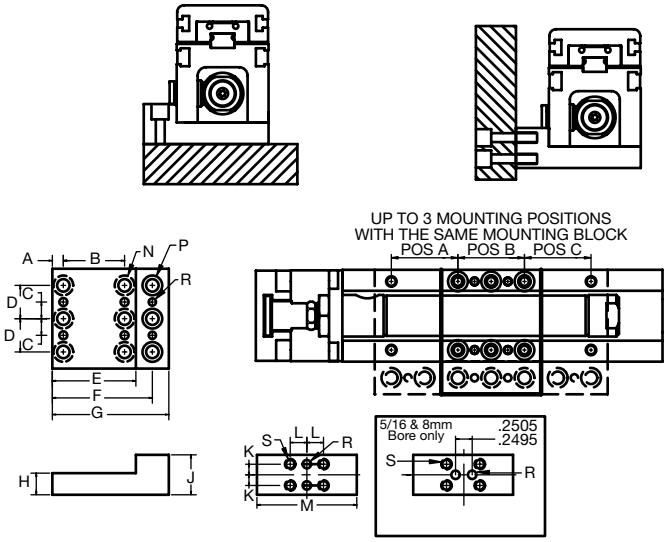

	Stroke (in)			
mm (in)	8mm & 5/16	12mm & 9/16	20mm & 3/4	25mm & 1-1/16
A	4.2 (0.16)	4.6 (0.17)	6.4 (0.25)	6.7 (0.26)
B	23.4 (0.92)	26.2 (1.03)	36.8 (1.45)	40.1 (1.57)
C	6.35 (0.25)	6.99 (0.27)	9.53 (0.37)	12.70 (0.50)
D	12.7 (0.50)	14.0 (0.55)	19.1 (0.75)	25.4 (1.00)
E	32 (1.25)	35.4 (1.39)	50.0 (1.97)	54.1 (2.12)
F	37.21 (1.46)	41.02 (1.61)	56.13 (2.20)	61.21 (2.40)
G	45.2 (1.77)	50.6 (1.99)	68.3 (2.69)	80.0 (3.15)
H	9.7 (0.37)	10.2 (0.40)	11.1 (0.43)	10.8 (0.42)
J	15.2 (0.60)	15.3 (0.60)	18.3 (0.72)	22.23 (0.87)
K	4.06 (0.16)	4.06 (0.16)	4.83 (0.19)	5.77 (0.23)
L	N/A	7.0 (0.27)	9.3 (0.37)	16.5 (0.65)
M	38.1 (1.50)	38.1 (1.50)	50.8 (2.00)	71.1 (2.80)
N	C'Bored for M4 SHCS	C'Bored for M4 SHCS	C'Bored for M5 SHCS	C'Bored for M5 SHCS
P	C'Bored for M4 SHCS	C'Bored for M4 SHCS	C'Bored for M5 SHCS	C'Bored for M6 SHCS
R	3 MM (S.F.)	3 MM (S.F.)	4 MM (S.F.)	4 MM (S.F.)
S	M4 x 0.7 Tap x 8 DP	M4 x 0.7 Tap x 8 DP	M5 x 0.8 Tap x 10 DP	M6 x 1.0 Tap x 12 DP

NuMate Dimensions A

	Bore			
Stroke (in)	5/16"	9/16"	3/4"	1-1/16"
X5 - 02"	2.13	2.37	2.85	3.57
3"- 4"	3.31	3.57	4.33	4.67
5"- 6"	N/A	5.15	5.17	5.50

Metric Dimension A

	Bore			
Stroke (mm)	8mm	12mm	20mm	25mm
25 - 50mm	70.4	70	77.9	105.5
80 - 100mm	100.4	99.4	115.5	133.5
125 - 160mm	N/A	139.6	136.8	154.6

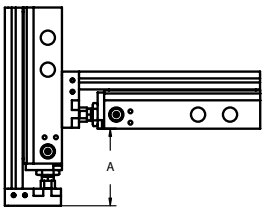

When Ordering Additional Base Plates

Bore	Part No.
5/16 & 8mm	US-BP08
9/16 & 12mm	US-BP12
3/4 & 20mm	US-BP20
1-1/16 & 25mm	US-BP25

Maximum Base plates allowed per stroke

	Bore			
Stroke	5/16 (8mm)	9/16 (12mm)	3/4 (20mm)	1-1/16 (25mm)
1/2"- 2"	1	1	1	1
3" - 4"	1	1	2	2
5" - 6"	N/A	2	2	2

Electronic Switch (PNP NO), flying lead – HPNPS31

Sensing Data		
Ambient temperature range $_d$	(°F/°C)	-13 to +158 (-25 to +70)
Temperature drift	(% of)	<= 0.3%/°C
Frequency of operating cycles f at U_e	(kHz)	10
Turn on time t	(ms)	.05
turn off time t	(ms)	.05
Utilization categories		DC13
Function–/supply voltage indication		YES
Electrical Data		
Rated operational voltage U_e	(V)	24 DC
Supply voltage U_B	(V)	10...30 DC
incl. ripple	(% of U_e)	15
Voltage drop U_d at I_e Stat./dyn.	(V)	1/–
Rated insulation volatage U_i	(V)	75 AC
Rated supply frequency	(Hz)	DC
Rated operational current I_e	(mA)	200
No-load supply current I_o at U_e d./und.	(mA)	25/13
Protected against polarity reversal		YES

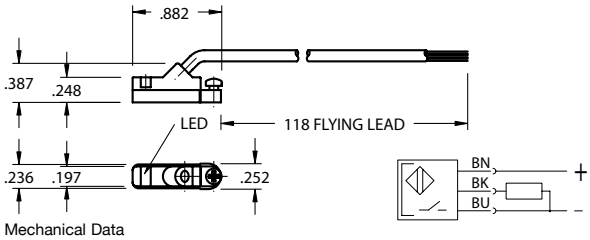

Mechanical Data

Housing material		Polyamide
Material of sensing face		Polyamide
Connection		PVC cable
Degree of Protection	IP	67

Rated shock: half-sinus, 30 g, 11 ms
Rated vibration environment: 55 Hz, 1mm amplitude, 3 x 30

Electronic Switch (PNP NO), 8mm connector – HPNPQ31

Sensing Data		
Ambient temperature range $_d$	(°F/°C)	-13 to +158 (-25 to +70)
Temperature drift	(% of S_r)	<= 0.3%/°C
Frequency of operating cycles f at U_e	(kHz)	10
Turn on time t	(ms)	.05
turn off time t	(ms)	.05
Utilization categories		DC13
Function–/supply voltage indication		YES
Electrical Data		
Rated operational voltage U_e	(V)	24 DC
Supply voltage U_B	(V)	10...30 DC
incl. ripple	(% of U_e)	15
Voltage drop U_d at I_e Stat./dyn.	(V)	1/–
Rated insulation volatage U_i	(V)	75 AC
Rated supply frequency	(Hz)	DC
Rated operational current I_e	(mA)	200
No-load supply current I_o at U_e d./und.	(mA)	25/13
Protected against polarity reversal		YES

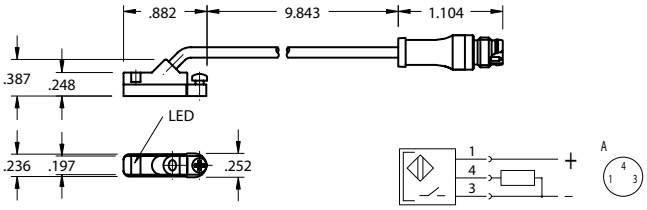

Mechanical Data

Housing material		Polyamide
Material of sensing face		Polyamide
Connection		PVC cable
Degree of Protection	IP	67

Rated shock: half-sinus, 30 g, 11 ms
Rated vibration environment: 55 Hz, 1mm amplitude, 3 x 30

Electronic Switch (NPN NO), flying lead – HNPNS32

Sensing Data		
Ambient temperature range $_d$	(°F/°C)	-13 to +158 (-25 to +70)
Temperature drift	(% of S_r)	<= 0.3%/°C
Frequency of operating cycles f at U_e	(kHz)	10
Turn on time t	(ms)	.05
turn off time t	(ms)	.05
Utilization categories		DC13
Function–/supply voltage indication		YES
Electrical Data		
Rated operational voltage U_e	(V)	24 DC
Supply voltage U_B	(V)	10...30 DC
incl. ripple	(% of U_e)	15
Voltage drop U_d at I_e Stat./dyn.	(V)	1/–
Rated insulation volatage U_i	(V)	75 AC
Rated supply frequency	(Hz)	DC
Rated operational current I_e	(mA)	200
No-load supply current I_o at U_e d./und.	(mA)	25/13
Protected against polarity reversal		YES

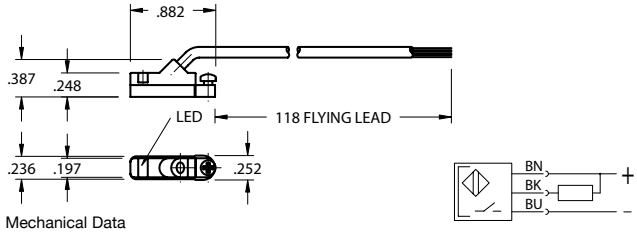

Mechanical Data

Housing material		Polyamide
Material of sensing face		Polyamide
Connection		PVC cable
Degree of Protection	IP	67

Rated shock: half-sinus, 30 g, 11 ms
Rated vibration environment: 55 Hz, 1mm amplitude, 3 x 30

Electronic Switch (NPN NO), 8mm connector – HNPNQ32

Sensing Data		
Ambient temperature range $_d$	(°F/°C)	-13 to +158 (-25 to +70)
Temperature drift	(% of S_r)	<= 0.3%/°C
Frequency of operating cycles f at U_e	(kHz)	10
Turn on time t	(ms)	.05
turn off time t	(ms)	.05
Utilization categories		DC13
Function–/supply voltage indication		YES
Electrical Data		
Rated operational voltage U_e	(V)	24 DC
Supply voltage U_B	(V)	10...30 DC
incl. ripple	(% of U_e)	15
Voltage drop U_d at I_e Stat./dyn.	(V)	1/–
Rated insulation volatage U_i	(V)	75 AC
Rated supply frequency	(Hz)	DC
Rated operational current I_e	(mA)	200
No-load supply current I_o at U_e d./und.	(mA)	25/13
Protected against polarity reversal		YES

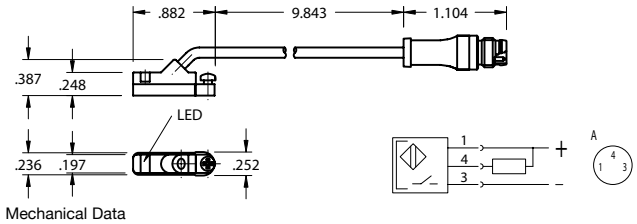

Mechanical Data

Housing material		Polyamide
Material of sensing face		Polyamide
Connection		PVC cable
Degree of Protection	IP	67

Rated shock: half-sinus, 30 g, 11 ms
Rated vibration environment: 55 Hz, 1mm amplitude, 3 x 30

Female Connectors for Reed Switches and Hall Effect Sensors

Dimensions (mm)

TYPE	ORDER CODE
Straight, 5 m Cable	PXCST
Elbow, 5 m Calbe	PXC90

Straight Type

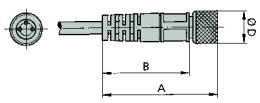

Elbow Type

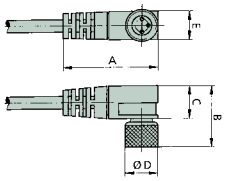

numatics

World Class Supplier of Pneumatic Components

World Headquarters
Numatics Incorporated
Phone: 248-887-4111
Fax: 248-887-9190

UNITED STATES

Numatics – Air Preparation
Phone: 810-667-3900
Fax: 810-667-3902

Numatics – Valves
Phone: 248-887-4111
Fax: 248-887-9190

Numatics – Miniature Valves
Phone: 248-960-1400
Fax: 248-960-2160

Numatics – Cylinders
Phone: 615-771-1200
Fax: 615-771-1201

Numatics – Rodless Cylinders
Phone: 519-452-1777
Fax: 519-452-3995

Numatics – Automation
Phone: 440-934-3200
Fax: 440-934-2288

CANADA

Ontario
Numatics, Ltd.
Phone: 519-452-1777
Fax: 519-452-3995

Quebec
Numatics, Ltd.
Phone: 514-332-6444
Fax: 514-332-9273

British Columbia
Numatics, Ltd.
Phone: 604-574-0401
Fax: 604-574-3713

EUROPE

Germany – European Headquarters
Numatics GmbH
Phone: 011-49-22 41-31 60-0
Fax: 011-49-22 41-31 60 40

Hungary
Numatics Kft.
Phone: 011-36-13 82 21 35
Fax: 011-36-12 04 39 47

EUROPE

England
Numatics Limited
Phone: 011-44-1525-37 07 35
Fax: 011-44-1525-38 25 67

France
Numatics s.a.r.l.
Phone: 011-33-1 41 21 48 88
Fax: 011-33-1 41 21 48 89

Italy
Numatics srl
Phone: 011-39-030-373 19 99
Fax: 011-39-030-373 19 81

Netherlands
Numatics B.V.
Phone: 011-31-418-65 29 50
Fax: 011-31-418-65 29 43

Spain
Numatics Spain S.L.
Phone: 011-34-93-221 21 96
Fax: 011-34-93-221 35 14

AFRICA

South Africa
Numatics SA (Pty) Ltd.
Phone: 011-27-11-8 65 44 52
Fax: 011-27-11-8 65 42 90

LATIN & SOUTH AMERICA

Mexico
Numatics de Mexico S.A. de C.V.
Phone: 011-52-222-284 6176
Fax: 011-52-222-284 6179

Brazil
Valvair Comercial Ltda.
Phone: 011-55-12-351 2874
Fax: 011-55-12-351 1958

ASIA & PACIFIC

Australia
Numatics Australia Pty. Ltd.
Phone: 011-61-3-95 63 86 00
Fax: 011-61-3-95 63 85 11

Taiwan – Asian Headquarters
Numatics Co, Ltd. Asia
Phone: 011-886-2-29 15 16 05
Fax: 011-886-2-29 14 18 97

For a comprehensive listing of all Numatics production and distribution facilities worldwide, visit www.numatics.com

LTULTRA-1
6M-MP-1105